PARAGUARD M RAISED EDGE

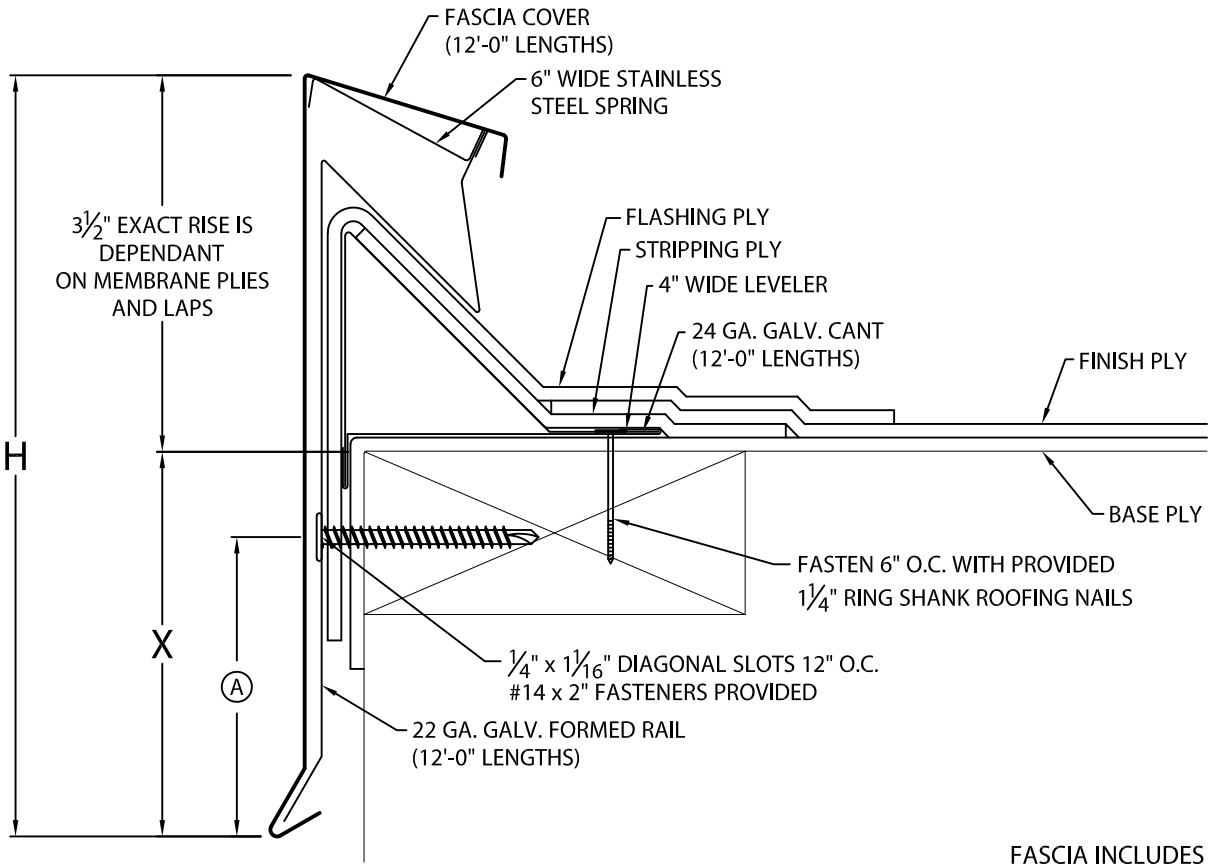

FASCIA INCLUDES 3 1/2"
WIDE SPLICE PLATE AT JOINTS.

(A) RANGES FROM 2" TO 2½" DEPENDING ON APPLICATION OF PLY'S AND LAPS

(B) OIL CANNING CAN OCCUR ON LARGER FACE HEIGHTS. REQUIRE 22 GA., .050" OR .063" FOR FACE HEIGHTS ABOVE 8½"

(C) WELDED ACCESSORIES REQUIRE A MINIMUM OF MATERIAL THICKNESS OF .050"

PARAGUARD M RAISED EDGE DIMENSIONS

PRODUCT ID. NO.	H DIM	X DIM	NAILER COVERAGE
☐ PGF-70	7"	3 1/2"	1 NAILER
☐ PGF-85	8 1/2"	5"	2 NAILERS
☐ PGF-100	10"	6 1/2"	3 NAILERS

ANSI/SPRI/FM 4435/ ES-1 DESIGN PRESSURE	PGF-70 TO PGF-85 IN 24 GA., 22 GA. OR .040" - 196 psf PGF-70 TO PGF-85 IN .050 OR .063" - 216 psf PGF-100 IN 22 GA., .050 OR .063" - 116 psf

AUTHORIZED SIGNATURE:

APPROVED BY: _____

DATE: _____

MATERIAL:

☐ 24 GA. GALV. STEEL (B)
☐ 22 GA. GALV. STEEL
☐ .040" ALUMINUM (B)
☐ .050" ALUMINUM
☐ .063" ALUMINUM
☐ OTHER _____

COLOR:_____ FINISH:_____

QUANTITIES:

_____ LINEAL FEET 12'-0" LENGTHS

_____ OUTSIDE MITER(S) @ 90°

_____ INSIDE MITER(S) @ 90°

_____ RIGHT ENDCAP(S)

_____ LEFT ENDCAP(S)

_____ OVERFLOW SCUPPER(S) STYLE____A____B

_____ SPILLOUT SCUPPER(S) STYLE____A____B

_____ DOWNSPOUT SCUPPER(S) STYLE____A____B

(_____X_____) SIZE

A: TAPERED 1 1/2" DROP
B: FLAT

SPECIFY ACCESSORY TYPE:

☐ WELDED (C)
☐ QUICKLOCK

FOR NON-90 MITERS SEE PRINT APPROVAL #44010-15636

PROJECT:

ROOFING CONTRACTOR:

SHIP TO ADDRESS:

CITY, STATE, ZIP:

PHONE: 800-922-8800
EMAIL: PGUARD@SIPLAST.COM

DATE: 12/05/18	SHT.#____ OF ____
DRN BY: JJC	DWG# 44010-30106 A
CKD BY: SAK	