WALL FLASHING WITH COATED METAL EDGE

PARASOLO ROOF MEMBRANE - INSULATED (ALL SYSTEMS)

LEGEND	
	HEAT WELD
	SEALANT

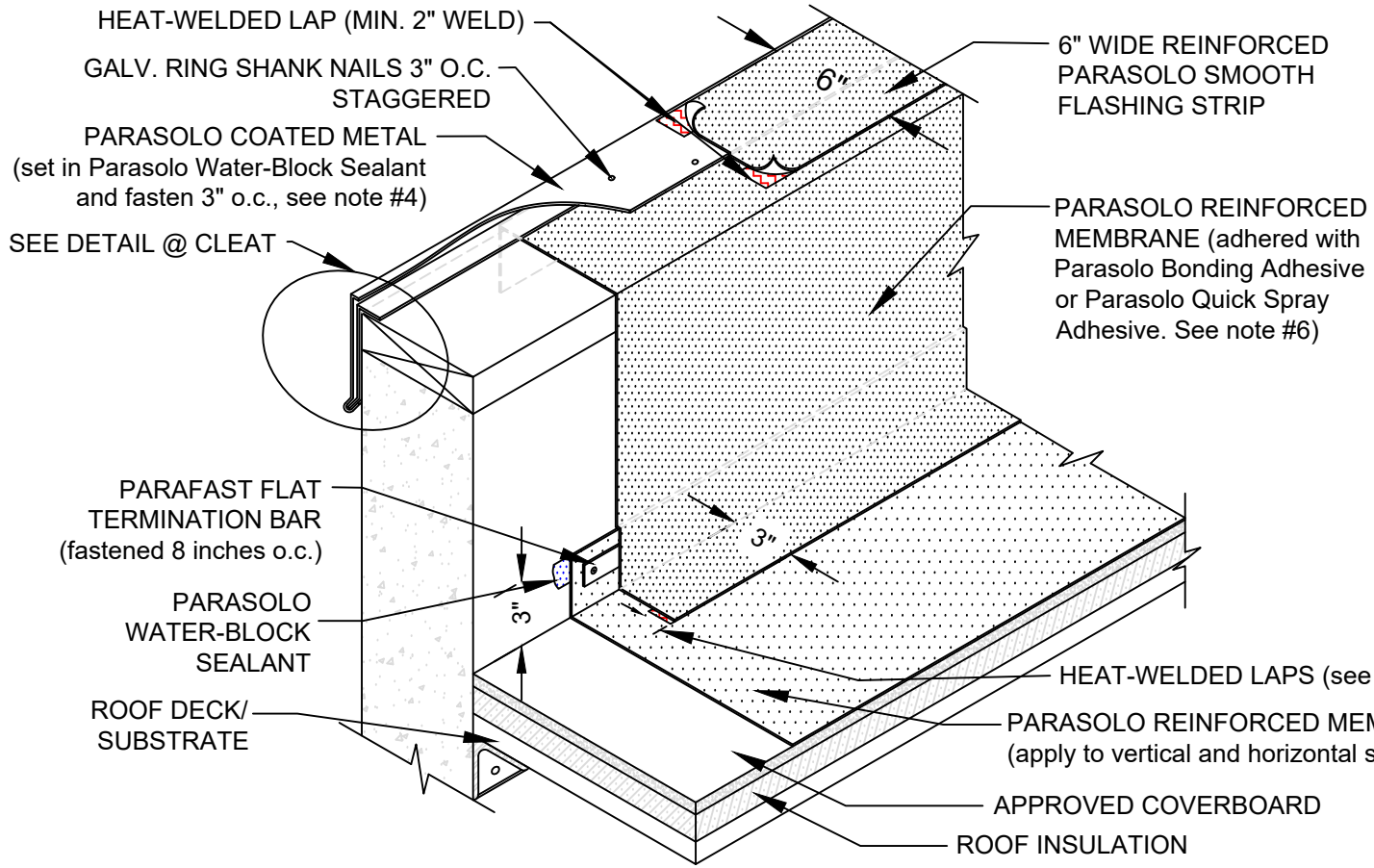

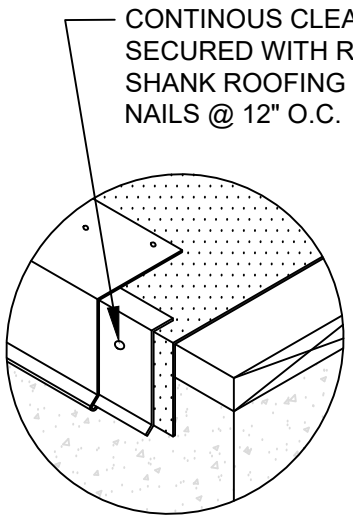

DETAIL @ CLEAT

NOTES:

1. METAL EDGE AND PARASOLO STRIPPING PLY SHOULD BE INSTALLED TOGETHER IN A SAME-DAY APPLICATION.
2. FOR HEAT-WELDING LAPS USE 1" MINIMUM WELD TO 1-1/2" MAXIMUM WELD.
3. THE CARPENTRY AND METAL WORK SHOWN DEPICTS SHOP FABRICATION AND JOB-SITE ASSEMBLY. THESE COMPONENTS SHOULD BE DESIGNED/FABRICATED/INSTALLED ACCORDING TO GENERALLY ACCEPTED INDUSTRY PRACTICES, STANDARDS, AND APPROVALS.
4. CONTACT THE SIPLAST TECHNICAL DEPARTMENT FOR INFORMATION REGARDING THE APPROPRIATE PROFILES AND GAUGES FOR CLEAT AND PARASOLO METAL.
5. REQUIREMENTS AND RECOMMENDATIONS DETAILED IN CURRENT SIPLAST SPECIFICATIONS SHALL APPLY IN ADDITION TO THE ABOVE DRAWIN
6. PARASOLO BONDING ADHESIVE CAN BE USED UP TO A MAXIMUM FLASHING HEIGHT OF 54 INCHES. ADDITIONAL TERMINATION IS REQUIRED FOR FLASHING HEIGHTS ABOVE 54 INCHES WHEN PARASOLO BONDING ADHESIVE IS USED. CONTACT THE SIPLAST TECHINCAL DEPARTMENT FOR ADDITIONAL INFORMATION.

Scale: NTS

REF: WALL FLASHING WITH COATED METAL EDGE - PARASOLO - INSULATED

Detail Number: DE-6266

siplast®

14911 Quorum Drive, Suite 600 - Dallas, Texas - 75254 (800) 922-8800

www.siplast.com

Rev: 06.08.2023